15th & Folsom

15th & FOLSOM

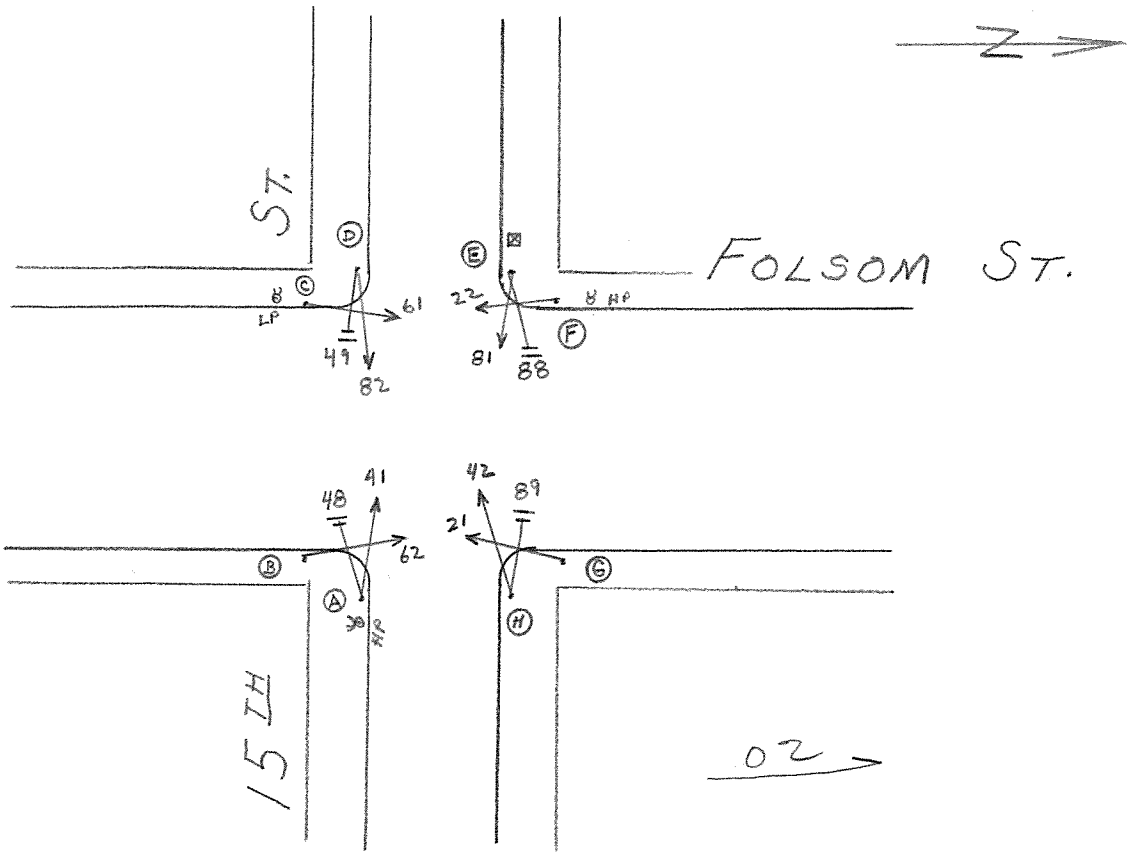

5-29-17

POLE	FUNC.	MAT'L
A	U	W
B	L	S
C	S	S
D	S	S
E	S	S
F	L	S
G	S	S
H	S	S

SIGNAL NO.	MAKE	NO. OF SECT.	SIZE	VISOR	B.P. OR LOUVERS	MOUN'T
62	EC	3	12"	T	No	S
41	EC	3	8"	FC 8"	No	S
82	EC	3	12"	T	No	T
61	EC	3	12"	T	No	T
22	EC	3	12"	T	No	S
81	EC	3	12"	T	No	T
42	EC	3	12"	T	No	T
21	EC	3	12"	T	No	T

PED SIGNAL NO.	LEGEND	MESSAGE ELEMENT	MESSAGE COLOR	MAKE	MOUN'T
48	W/DW	IS-1	W/OR	ICC	S
49	W/DW	IS-1	W/OR	ICC	S
88	W/DW	IS-1	W/OR	ICC	S
89	W/DW	IS-1	W/OR	ICC	S

CONTROLLER CABINET SIZE : ORDINARY BASE CABINET: YES

COMMENTS : Signal #21, 22, 42, 61, 62, 82 upgraded to 12" per SPC 2016-361. JJC