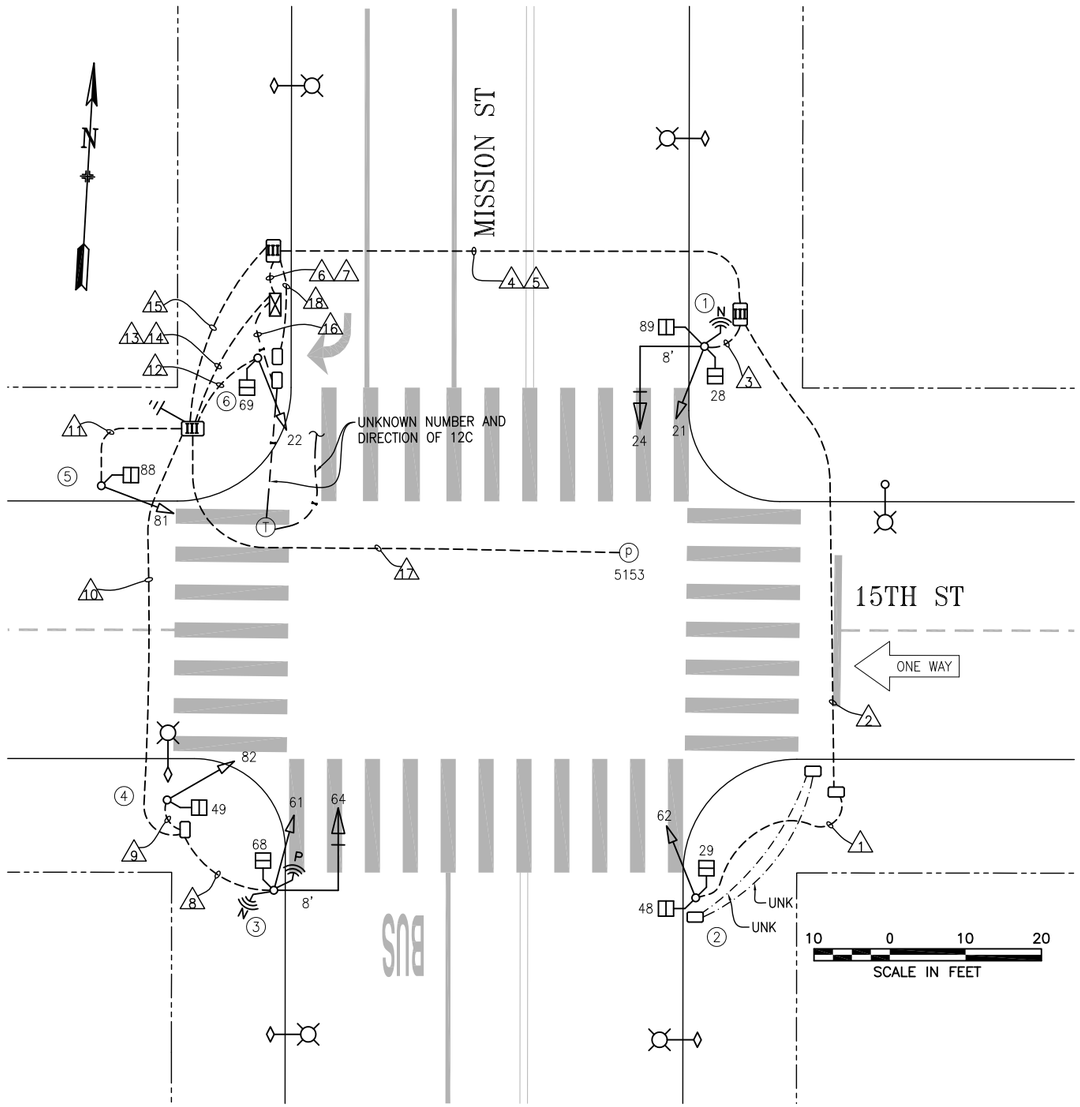

POLE AND EQUIPMENT SCHEDULE

POLE No.	TYPE OF POLE	LUMINAIRE TYPE	VEHICLE SIGNAL					PEDESTRIAN SIGNAL			REMARKS
			No.	TYPE	MOUNTING	VISORS	LOUVERS/BP	No.	TYPE	MOUNTING	
1	16-1-70 W/ 8' MAST ARM		24 21	3S12" 3S8"	MAS-SF SV-1-T	T T	BP	28 89	1S-C 1S-C	SP-1 SP-1	NETWORK RADIO
2	1-A (10')		62	3S8"	TV-1-T	T		29 48	1S-C 1S-C	SP-1 SP-1	
3	16-1-70 W/ 8' MAST ARM		64 61	3S12" 3S8"	MAS-SF SV-1-T	T T	BP	68	1S-C	SP-1	TSP RADIO NETWORK RADIO
4	1-A (10')		82	3S8"	TV-1	T		49	1S-C	SP-1	
5	1-A (10')		81	3S8"	TV-1	T		88	1S-C	SP-1	
6	1-A (10')		22	3S8"	TV-1-T	T		69	1S-C	SP-1	

MAS-SF = MAST ARM PLUMBIZER BETWEEN YELLOW AND GREEN BALL

NO.	DATE	DESCRIPTION	BY	APPROVED
1	8/10/23	UPDATE PER FIELD; UPDATE TSP/NETWORK EQUIP, MAS PLUMBIZER & M-SF. REMO RLC	D. YEUNG	G. DE LEON
0	7/31/08	CONVERTED FROM CONTRACT 0944J(R) AS-BUILTS	D. YEUNG	G. DE LEON

TABLE OF REVISIONS
CHECKOUT DRAWING THROUGH THE SID CUSTODIAN FOR THE LATEST REVISION

SEAL OF THE CITY AND COUNTY OF SAN FRANCISCO

SFMTA

DRAWN BY: D. YEUNG DATE: MAR 2023
CHECKED BY: G. DE LEON DATE: MAR 2023

SCALE: AS SHOWN
SHEET OF SHEETS: 1 OF 2

TRAFFIC SIGNAL INVENTORY DIAGRAM

15TH ST AND MISSION ST

CNN NO: 24171000
REV NO: 1

CONDUIT AND WIRING SCHEDULE (FURNISH AND INSTALL CONDUIT AND WIRES)

CONDUIT RUN NUMBER	1	2	3	4	5	6	7	8	9	10	11	12	13	14	15	16	17	18
CONDUIT SIZE (INCH)	2	2	2	2	2	3	2	2	2	2	2	2	3	2	2	2	2	UNK
NOTES					SP		SP							SP	SP			
VEHICLE SIGNAL 62	3	3		3		3												
PED SIGNAL 29	2	2		2		2												
PED SIGNAL 48	2	2		2		2												
VEHICLE SIGNAL 24			3	3		3												
VEHICLE SIGNAL 21			3	3		3												
PED SIGNAL 28			2	2		2												
PED SIGNAL 89			2	2		2												
VEHICLE SIGNAL 64								3		3			3					
VEHICLE SIGNAL 61								3		3			3					
PED SIGNAL 68								2		2			2					
VEHICLE SIGNAL 82									3	3			3					
PED SIGNAL 49									2	2			2					
VEHICLE SIGNAL 81											3		3					
PED SIGNAL 88											2		2					
VEHICLE SIGNAL 22												3	3					
PED SIGNAL 69												2	2					
#14 NEUTRAL	3		4					3	2		2	2						
#14 SPARE		3		3						3								
TOTAL #14 WIRES	10	10	14	20		17		11	7	16	7	7	23					
#10 NEUTRAL		1		2		2				1			2					
#10 WIRES STREETLIGHT																		
#8 WIRES STREETLIGHT																		
#8 WIRES (120 V TS SERVICE)													2				2	
#8 WIRES (120 V SL SERVICE)																		
#8 WIRES (120/240V SERVICE)																		
INTERCONNECT 12C CABLE																2		
#8 AWG BACKFEEDING WIRES																		
#8 AWG LOCATING WIRES																		
OPTICOM INFRARED RECEIVER CABLE (NOT CURRENTLY IN USE)			1	1		1		1		1			1					
TSP RADIO CABLE								X	X	X			?	?				
NETWORK RADIO CABLE			X	?	?	?	?	X	X	X			?	?				

NO.	DATE	DESCRIPTION	BY	APPROVED
1	8/10/23	UPDATE PER FIELD: ADD TSP & NETWORK RADIO CABLE	D. YEUNG	G. DE LEON
0	7/31/08	CONVERTED FROM CONTRACT 0944J(R) AS-BUILTS	D. YEUNG	G. DE LEON

TABLE OF REVISIONS
CHECKOUT DRAWING THROUGH THE SID CUSTODIAN FOR THE LATEST REVISION

SEAL OF THE CITY AND COUNTY OF SAN FRANCISCO

SFMTA

DRAWN BY: D. YEUNG DATE: MAR 2023
CHECKED BY: G. DE LEON DATE: MAR 2023

SCALE: NONE
SHEET OF SHEETS: 2 OF 2

TRAFFIC SIGNAL INVENTORY DIAGRAM
15TH ST AND MISSION ST

CNN NO: 24171000
REV NO: 1