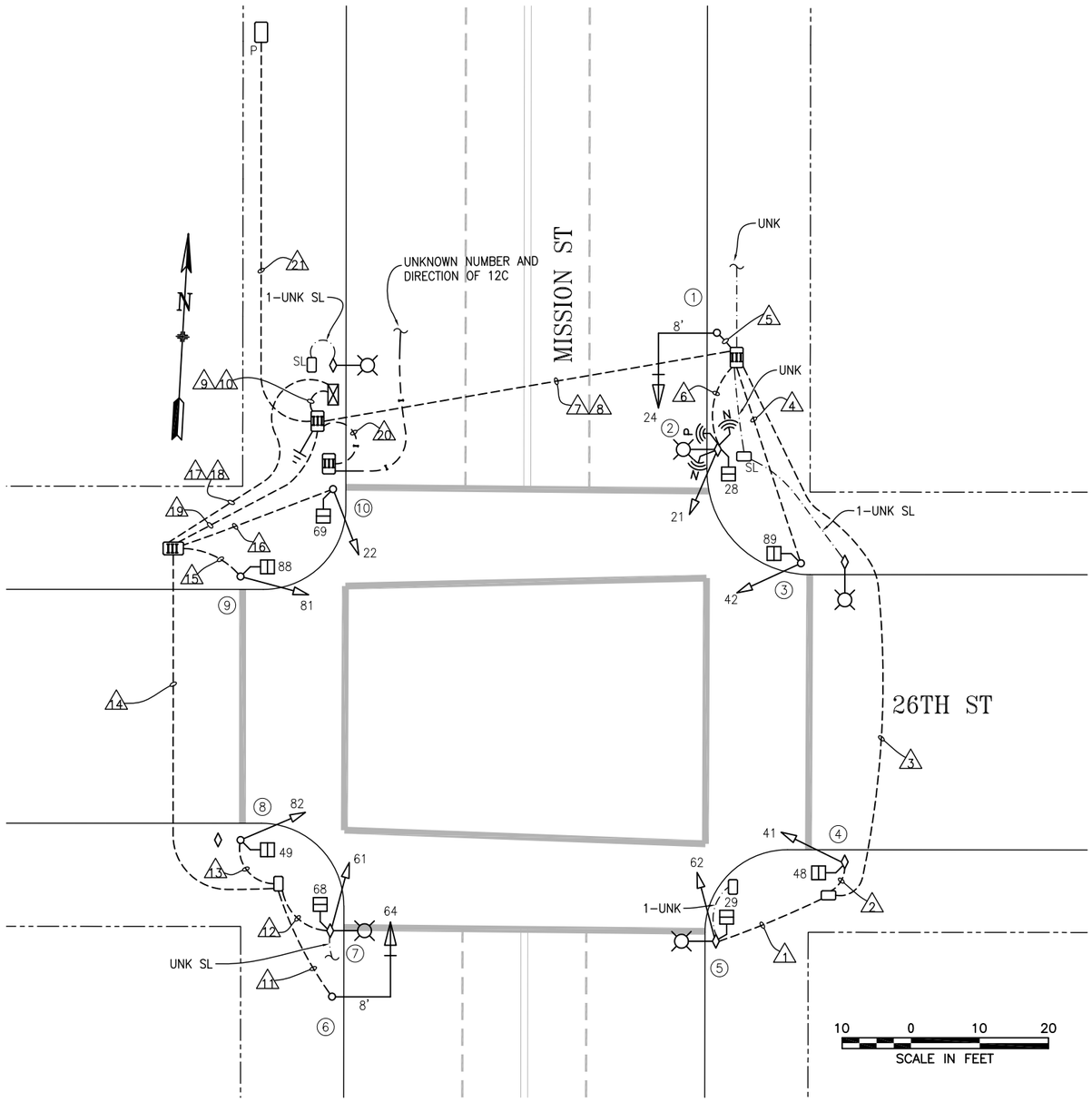

POLE AND EQUIPMENT SCHEDULE

POLE No.	TYPE OF POLE	LUMINAIRE TYPE	VEHICLE SIGNAL					PEDESTRIAN SIGNAL			REMARKS
			No.	TYPE	MOUNTING	VISORS	LOUVERS/BP	No.	TYPE	MOUNTING	
1	16-1-70 W/ 8' MA		24	3S12"	MAS	T	BP				
2	MUNI POLE W/ 6' LA		21	3S8"	SV-1-T	T		28	1S-C	SP-1	NETWORK RADIO NETWORK RADIO TSP RADIO
3	1-A (10')		42	3S8"	TV-1	T		89	1S-C	SP-1	
4	MUNI POLE		41	3S8"	SV-1	T		48	1S-C	SP-1	
5	MUNI POLE W/ 6' LA		62	3S8"	SV-1-T	T		29	1S-C	SP-1-T	EXTERNAL CONDUIT
6	16-1-70 W/ 8' MA		64	3S12"	MAS-SF	T	BP				
7	MUNI POLE W/ 6' LA		61	3S8"	SV-1-T	T		68	1S-C	SP-1-T	EXTERNAL CONDUIT
8	1-A (10')		82	3S8"	TV-1	T		49	1S-C	SP-1	
9	1-A (10')		81	3S8"	TV-1	T		88	1S-C	SP-1	
10	1-A (10')		22	3S8"	TV-1	T		69	1S-C	SP-1	

MAS-SF = MAST ARM PLUMBIZER BETWEEN YELLOW AND GREEN BALL

NO.	DATE	DESCRIPTION	BY	APPROVED
1	8/10/23	UPDATE PER FIELD: ADD TSP/NETWORK EQUIP, MAS-SF & M-SF. POLE 4 IS MUNI POLE	D. YEUNG	G. DE LEON
0	7/31/08	CONVERTED FROM CONTRACT 0944J(R) AS-BUILTS	D. YEUNG	G. DE LEON

TABLE OF REVISIONS
CHECKOUT DRAWING THROUGH THE SID CUSTODIAN FOR THE LATEST REVISION

SEAL OF THE CITY AND COUNTY OF SAN FRANCISCO

SFMTA

DRAWN BY: D. YEUNG DATE: MAR 2023
CHECKED BY: G. DE LEON DATE: MAR 2023

SCALE: AS SHOWN
SHEET OF SHEETS: 1 OF 2

TRAFFIC SIGNAL INVENTORY DIAGRAM

26TH ST AND MISSION ST

CNN NO: 21306000
REV NO: 1

CONDUIT AND WIRING SCHEDULE (FURNISH AND INSTALL CONDUIT AND WIRES)

CONDUIT RUN NUMBER	1	2	3	4	5	6	7	8	9	10	11	12	13	14	15	16	17	18	19	20	21
CONDUIT SIZE (INCH)	2	2	2	2	2	2	2	2	3	2	2	2	2	2	2	2	3	2	2	2	2
NOTES										SP								SP	SP		
VEHICLE SIGNAL 62	3		3				3		3												
PED SIGNAL 29	2		2				2		2												
VEHICLE SIGNAL 41		3	3				3		3												
PED SIGNAL 48		2	2				2		2												
VEHICLE SIGNAL 42				3				3	3												
PED SIGNAL 89				2				2	2												
VEHICLE SIGNAL 24					3			3	3												
VEHICLE SIGNAL 21						3		3	3												
PED SIGNAL 28						2		2	2												
VEHICLE SIGNAL 64											3			3			3				
VEHICLE SIGNAL 61												3		3			3				
PED SIGNAL 68												2		2			2				
VEHICLE SIGNAL 82													3	3			3				
PED SIGNAL 49													2	2			2				
VEHICLE SIGNAL 81															3		3				
PED SIGNAL 88															2		2				
VEHICLE SIGNAL 22																3	3				
PED SIGNAL 69																2	2				
#14 NEUTRAL	2	2		2	1	2					1	2	2		2	2					
#14 SPARE			3				3		3					3			3				
TOTAL #14 WIRES	7	7	13	7	4	7	13	13	26		4	7	7	16	7	7	26				
#10 NEUTRAL			1				1	1	2					1			2				
#10 WIRES STREETLIGHT						EX															
#8 WIRES STREETLIGHT																					
#8 WIRES (120 V TS SERVICE)									2											2	
#8 WIRES (120 V SL SERVICE)																					
#8 WIRES (120/240V SERVICE)																					
INTERCONNECT 12C CABLE									1										1		
#8 AWG BACKFEEDING WIRES																					
#8 AWG LOCATING WIRES																					
NETWORK RADIO CABLE						X	?	?	?	?											
TSP RADIO CABLE						X	?	?	?	?											

NO.	DATE	DESCRIPTION	BY	APPROVED
1	8/10/23	UPDATE PER FIELD: ADD TSP/NETWORK EQUIP CABLE	D. YEUNG	G. DE LEON
0	7/31/08	CONVERTED FROM CONTRACT 0944J(R) AS-BUILTS	D. YEUNG	G. DE LEON

TABLE OF REVISIONS
CHECKOUT DRAWING THROUGH THE SID CUSTODIAN FOR THE LATEST REVISION

SEAL OF THE CITY AND COUNTY OF SAN FRANCISCO

SFMTA

DRAWN BY: D. YEUNG DATE: MAR 2023
CHECKED BY: G. DE LEON DATE: MAR 2023

SCALE: NONE
SHEET OF SHEETS: 2 OF 2

TRAFFIC SIGNAL INVENTORY DIAGRAM

26TH ST AND MISSION ST

CNN NO: 21306000
REV NO: 1