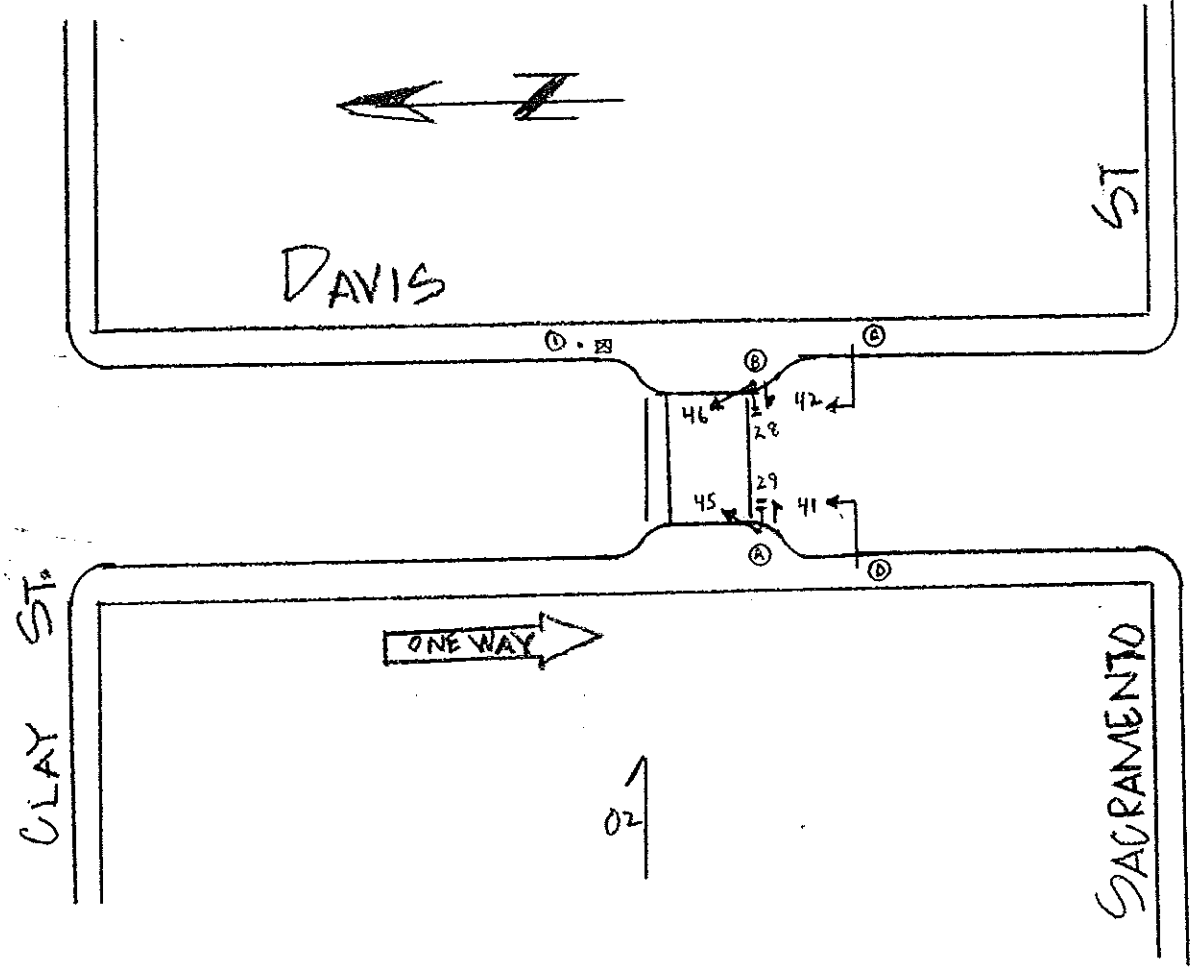

9-15-86

POLE	FUNC.	MAT'L
A	S	S
B	S	S
C	S	S
D	S	S
1	L	S

SIGNAL NO.	MAKE	NO. OF SECT.	SIZE	VISOR	B.P. OR LOUVERS	MOUN'T
41	EC	3	12"	FC 12'	BP	A
42	EC	3	12"	FC 12"	BP	A
45	EC	3	8"	FC 8'	No	T
46	EC	3	8"	FC 8"	No	T

PED SIGNAL NO.	LEGEND	MESSAGE ELEMENT	MESSAGE COLOR	MAKE	MOUN'T
28	I	IS-1	OR/W	ICC	S
29	I	IS-1	OR/W	ICC	S

CONTROLLER CABINET SIZE : ORDINARY BASE CABINET: yes

COMMENTS: ↑ Ped push button