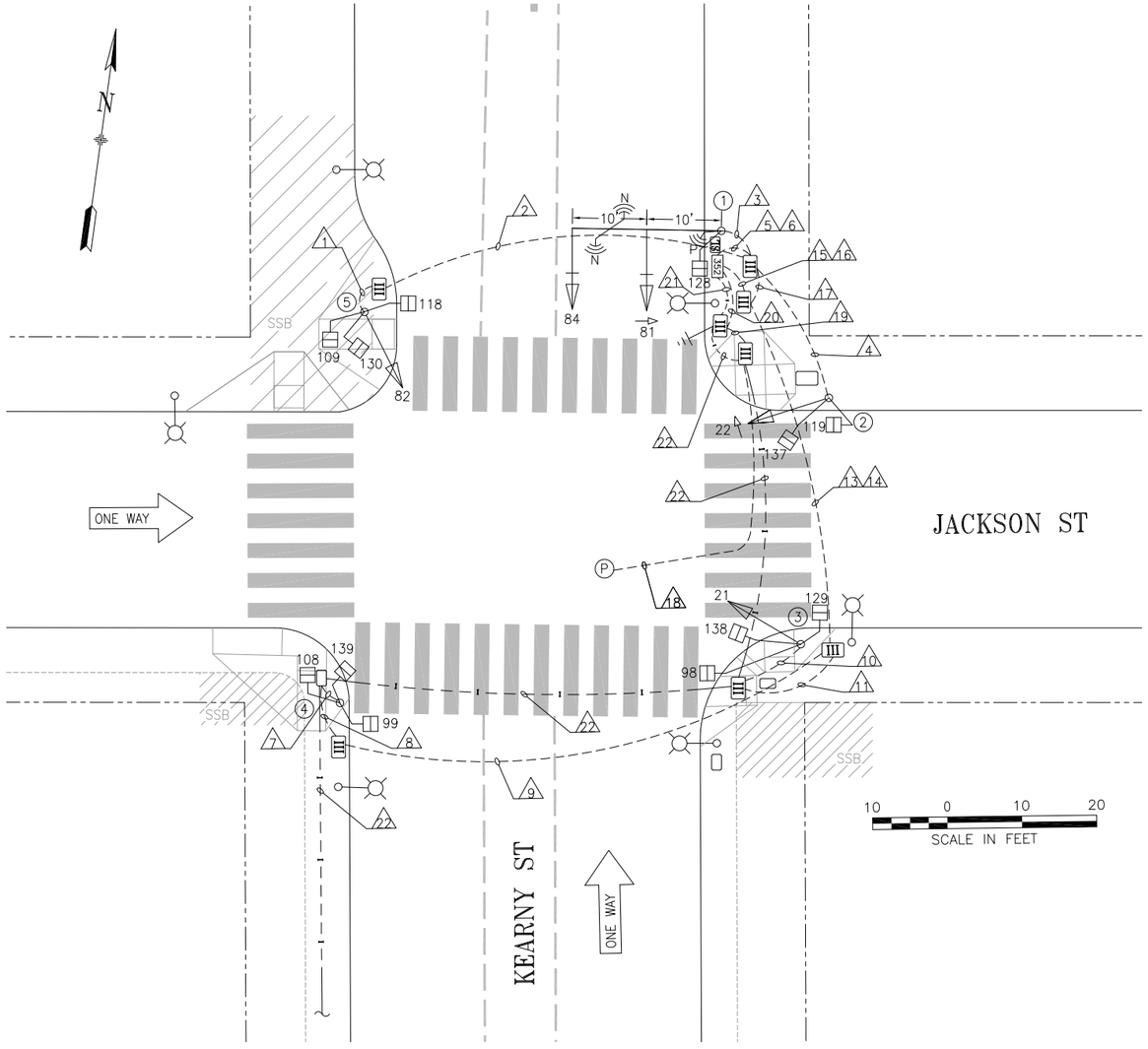

POLE AND EQUIPMENT SCHEDULE											
POLE No.	TYPE OF POLE	FIXTURE TYPE	VEHICLE SIGNAL					PEDESTRIAN SIGNAL			REMARKS
			No.	TYPE	MOUNTING	VISORS	LOUVERS	No.	TYPE	MOUNTING	
①	17-3-100 W/ 20' MAST ARM		84 81	3S12" 4S12"GRA	MAC MAC	T T	BP BP	128	1S-COUNT	SP-1-T	NETWORK AND PREEMPT RADIOS
②	1-A (10')		22	4S12"GLA	TV-1-T	T		119 137	1S-COUNT 1S-COUNT	SP-1 (22") SP-1-SF (12")	
③	1-A (10')		21	3S12"	TV-1-T	T		98 129 138	1S-COUNT 1S-COUNT 1S-COUNT	SP-3-T (45°)	
④	1-A (7')							99 108 139	1S-COUNT 1S-COUNT 1S-COUNT	TP-3-TA	
⑤	1-A (15')		82	3S12"	SV-1-T	T		109 118 130	1S-COUNT 1S-COUNT 1S-COUNT	SP-3-T	

MOUNTING DETAILS

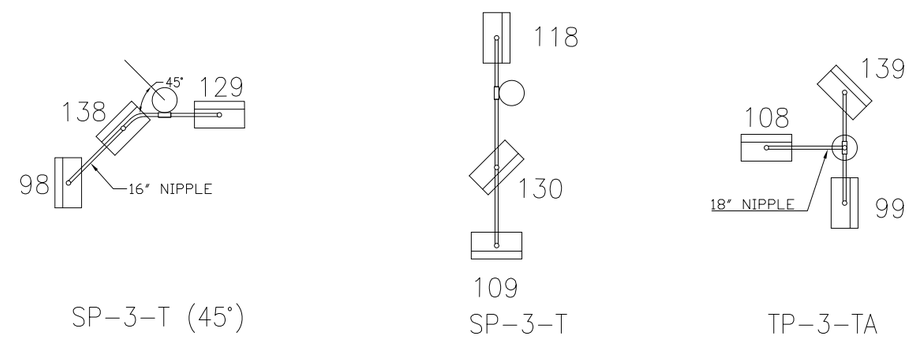

NO.	DATE	DESCRIPTION	BY	APPROVED
2	2/9/23	RESTORE NETWORK & PREEMPT RADIOS PER SRC 2022-279 & FIELD CHECK	C.LEUNG	M.VELASCO
1	10/29/22	ADD 4S12"GRA FOR 81 & 4S12"GLA FOR 22 PER SRC 2022-267; MISC ELECTRICAL WORKS	C.LEUNG	M.VELASCO
0	9/13/22	CONVERTED FROM CONTRACT 2483J CONSTRUCTION PLAN	C.LEUNG	M.VELASCO

TABLE OF REVISIONS
CHECKOUT DRAWING THROUGH THE SID CUSTODIAN FOR THE LATEST REVISION

SEAL OF THE CITY AND COUNTY OF SAN FRANCISCO

SFMTA

DRAWN BY: C.LEUNG DATE: 10/2022
CHECKED BY: M.VELASCO DATE: 10/2022

SCALE: AS SHOWN
SHEET OF SHEETS: 1 OF 2

TRAFFIC SIGNAL INVENTORY DIAGRAM

JACKSON ST AND KEARNY ST

CNN NO: 24778000
REV NO: 2

CONDUIT AND WIRING SCHEDULE (FURNISH AND INSTALL CONDUIT AND WIRES)

CONDUIT RUN NUMBER		1	2	3	4	5	6	7	8	9	10	11		13	14	15	16	17	18	19	20	21	22			
CONDUIT SIZE (INCH)		2	2	2	2	3	2	2	2	2	2	2		2	2	3	2	2	1	UNK	2	2	2			
NOTES			EX				SP	EX		EX	EX		N/A	EX	EX/SP		SP	EX/SP	EX	EX			EX/GRS			
	VEHICLE SIGNAL 82	3	3			3																				
	PED SIGNAL 109	2	2			2																				
	PED SIGNAL 118	2	2			2																				
	PED SIGNAL 130	2	2			2																				
	VEHICLE SIGNAL 81			4		4																				
	VEHICLE SIGNAL 84			3		3																				
	PED SIGNAL 128			2		2																				
	VEHICLE SIGNAL 22				4	4																				
	PED SIGNAL 119				2	2																				
	PED SIGNAL 137				2	2																				
	PED SIGNAL 99							2	2	2				2		2										
	PED SIGNAL 108							2	2	2				2		2										
	PED SIGNAL 139							2	2	2				2		2										
	VEHICLE SIGNAL 21										3	3		3		3										
	PED SIGNAL 98										2	2		2		2										
	PED SIGNAL 129										2	2		2		2										
	PED SIGNAL 138										2	2		2		2										
	#14 NEUTRAL	2		3	3			1	1		2	2														
	#14 SPARE		3			3				3				3		3										
	TOTAL #14 WIRES	11	12	12	11	29		7	7	9	11	11		18		18										
	#10 WIRES NEUTRAL		1			2				1				2		2										
	#10 WIRES STREET LIGHT																									
	#8 WIRES STREET LIGHT																									
	#8 WIRES (120 V SERVICE)																		2	2	2					
	#6 BSCW (SEE SHEET NOTE 1)																									
	INTERCONNECT 12C CABLE									1					1		1					1	1			
	NETWORK RADIO CAT6 CABLE			2		2																				
	PREEMPT RADIO CABLE			1		1																				

NO.	DATE	DESCRIPTION	BY	APPROVED
2	2/9/23	RESTORE WIRELESS RADIOS PER SRC 2022-279 & FIELD CHECK	C.LEUNG	M.VELASCO
1	10/29/22	ADD 4S12"GRA FOR 81 & 4S12"GLA FOR 22 PER SRC 2022-267	C.LEUNG	M.VELASCO
0	9/13/22	CONVERTED FROM CONTRACT 2483J CONSTRUCTION PLAN	C.LEUNG	M.VELASCO

TABLE OF REVISIONS
CHECKOUT DRAWING THROUGH THE SID CUSTODIAN FOR THE LATEST REVISION

SFMTA

DRAWN BY: C.LEUNG DATE: 10/2022
CHECKED BY: M.VELASCO DATE: 10/2022

SCALE: AS SHOWN
SHEET OF SHEETS: 2 OF 2

TRAFFIC SIGNAL INVENTORY DIAGRAM

JACKSON ST AND KEARNY ST

CNN NO: 24778000
REV NO: 2